PAST, PRESENT AND FUTURE

150 YEARS OF HERITAGE

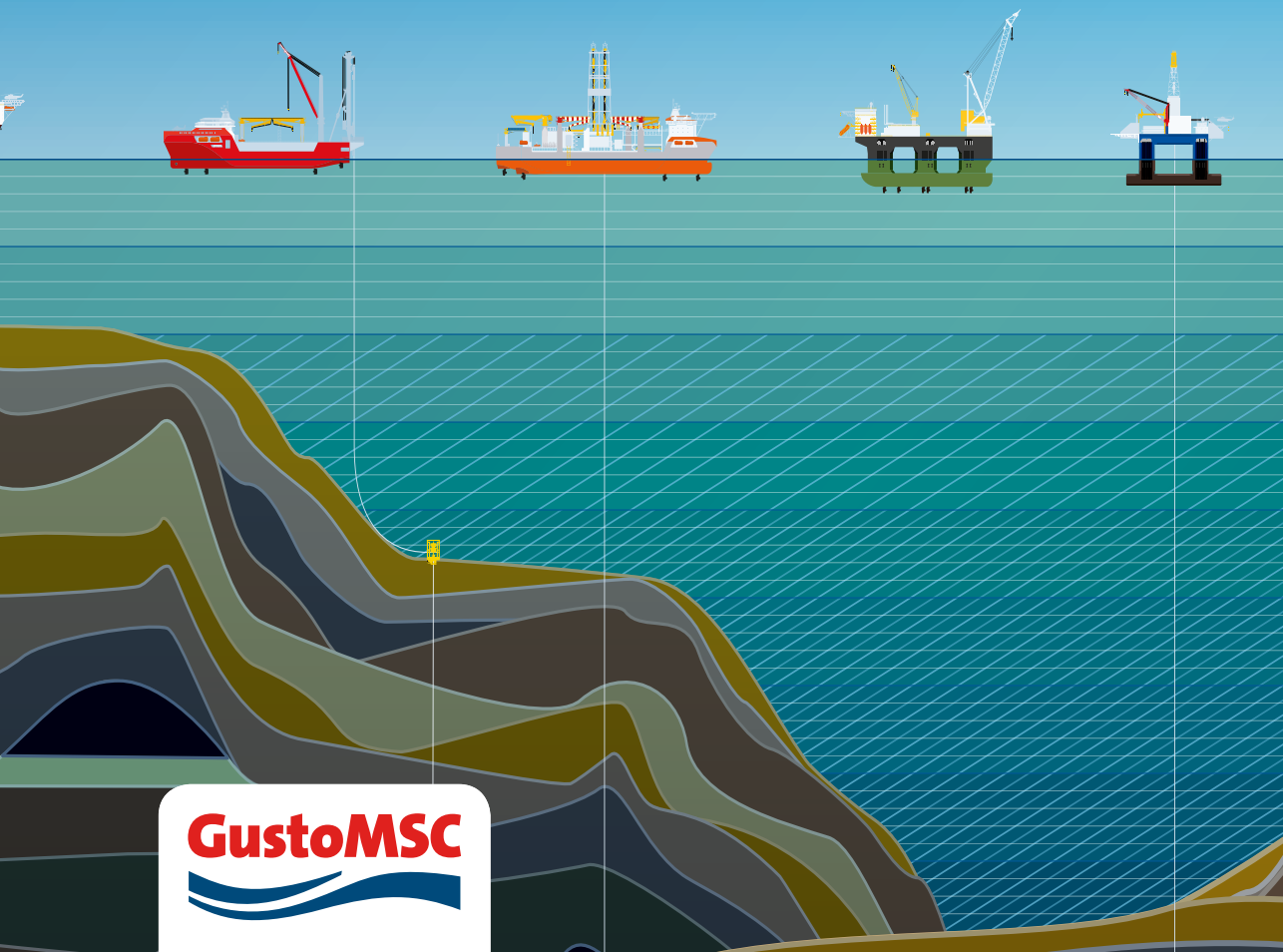

GustoMSC

PAST, PRESENT AND FUTURE

150 YEARS OF HERITAGE

GustoMSC

PAST, PRESENT AND FUTURE

CONTENTS

CHAPTER 1

INTRODUCTION

The history of a company can be described in terms of the various configurations of companies and their ownership over time, or in terms of its founders and the employees that contributed to its success. This booklet provides a brief history of GustoMSC using as guideline its contribution to the Offshore Industry and in particular those Mobile Offshore Units that were key to the development and success of GustoMSC today.

This booklet is issued to mark the move of the new GustoMSC Schiedam headquarters. The office is now located in a renovated industrial building, once part of the former Wilton Shipyard. The conference rooms in the office have been named in honour of the very same key Mobile Offshore Units.

Those key units are briefly described, showing their origin, development and place in GustoMSC's history. They demonstrate that GustoMSC has provided jack-ups, semi-submersibles and vessels to many sectors of the Offshore Industry: for the exploration and production of Oil & Gas, Civil Construction for harbours and bridges and for offshore windfarms for Renewable Energy.

Besides the impressive pioneering past of our company, the future prospects are briefly mentioned as well, based on the efforts and forward thinking of our employees.

We trust that this booklet provides inspiration and an insight in GustoMSC's heritage as an important contributor to the future of GustoMSC.

We would particularly like to express our thanks to the members of the GustoMSC History Group, consisting of many present and former employees, who are devoting their time to keep GustoMSC's history alive; the Group made a substantial contribution to this booklet.

CHAPTER 2

OUR HISTORY

150 years of heritage

1862

A.F. Smulders sets up his machine factory and iron foundry in 's-Hertogenbosch. In 1872 Smulders moves to a larger site in Utrecht and his product range is extended with steel structures, dredging equipment and cranes. In 1894 Smulders acquires a shipyard in Slikkerveer in order to build his own hulls.

1905

Smulders sets up a new large shipyard in Schiedam under the name Gusto. His product range is further extended with several types of merchant and naval ships.

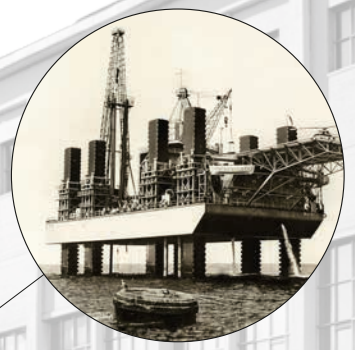

1959

Gusto enters the offshore industry by delivering the first jack-up drilling platform designed and built in Europe – to its own patented design and named SeaShell – to the Shell Group. Based upon the same design principles, around 40 jack-ups for drilling and civil construction followed in the next decades.

1972

Gusto designs, builds and delivers the Pelican, the first fully Dynamic Positioned, anchorless Oil & Gas deep water drilling vessel in the world. It is the first unit of a very successful series of DP Drillships built and later also licensed by Gusto.

1975

Delivery of the Gusto designed semi-submersible pipe-lay barge Viking Piper (later named Castoro 7). Because of its many novel features this unit sets new industry standards for pipe laying capabilities and operating weather windows and is still operating with success.

1977

A number of the Project/Design Team and R&D engineers leave Gusto and form the independent design and engineering company Marine Structure Consultants (MSC). In 1978, the first civil construction jack-up with patented MSC jacking system was delivered, the Dirk (now Heron). Based upon the same design principles, a further 30 jack-ups for construction activities followed in the next decades.

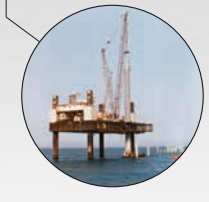

1978

Gusto shipyard closes and is succeeded by Gusto Engineering. Its designs are built by shipyards worldwide. Examples include the semi-submersible crane vessels Balder and Hermod delivered in Japan for Heerema in 1978, setting a revolution in offshore construction, the arctic drilling jack-ups Sakhalinskaja and Kolskaja for Russia delivered in Finland in 1985, and the large series of DP drillships starting in 1999 with the Pride Africa.

1981

Delivery of the first MSC designed CJ cantilever drilling jack-up, the Dyvi Epsilon (now Paragon C462). The CJ series provides a sturdy jack-up design for exploratory and workover drilling. To date some 65 CJ type jack-ups have been built or are under construction, the proof of a very successful and well recognized design in the offshore history.

1987

Delivery of the first MSC designed compact semi-submersible, Semi 1, for accommodation and maintenance and construction support. By 1988, Gusto Engineering and MSC are both working as independent companies under IHC Caland Holding and considering closer cooperation. Based on Semi 1 and its sister Semi 2, MSC elaborates designs for much larger types of semi-submersibles resulting in the Maersk Explorer delivered in 2003 (the first DSS semi-submersible).

2003

Gusto Engineering and MSC form an alliance, GustoMSC, for joint marketing activities with offices in Schiedam and Houston. These joint efforts result in the delivery in 2009 of the Seajacks Kraken (the first NG-2500X jack-up), in 2010 of the Deepwater Champion (the first P 10.000 NG DP drillship) and also the Floatel Superior (the first DP3 accommodation semi-submersible).

2011

Gusto Engineering and MSC merge into one company named GustoMSC, concentrating on design and engineering for the global offshore market. The Sea Installer (the first NG-9000C jack-up specially designed for the offshore wind industry) is their first project, delivered in 2012. Many projects follow, worthy of special mention are the CAT-J CJ70 jack-ups, specially designed for Statoil, entering service in 2016-2017.

2015

GustoMSC inaugurates its new office location, in a converted historic industrial building once part of the Wilton shipyard in Schiedam, and continues as an independent, world renowned and leading design and engineering company for the offshore market, with a global market share for its main products of more than 20 %.

CHAPTER 3

THE MILESTONE UNITS

Over the last 55 years of being active in the Mobile Offshore Industry, over 200 units have been built to GustoMSC design. From this fleet we have selected 15 units, in particular those mobile offshore units that were key to the development and success of GustoMSC today.

In the following sections, each of these 15 key units is briefly described, explaining their origin, development and place in GustoMSC history. They demonstrate that GustoMSC has provided jack-ups, semi-submersibles and vessels to many sectors of the Offshore Industry: for the exploration and production of Oil & Gas, Civil Construction for harbours and bridges and for offshore windfarms for Renewable Energy.

The key units are discussed in sequence of delivery dates.

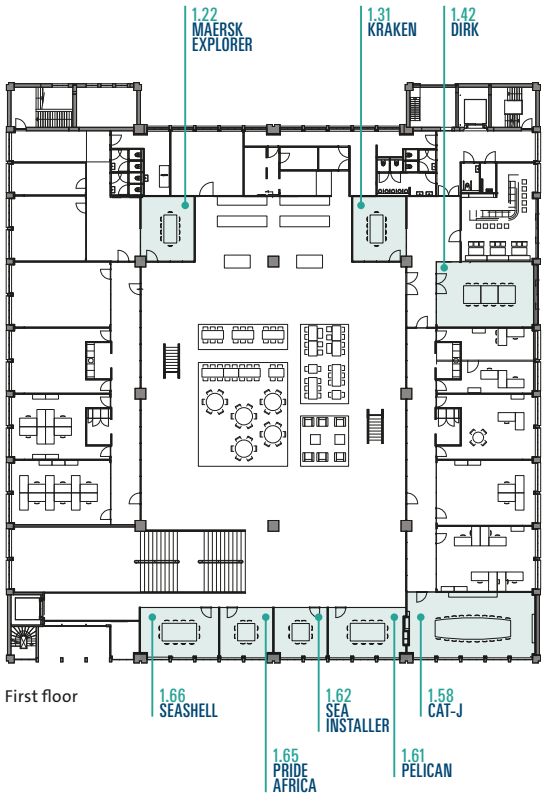

First floor

The locations of the conference rooms, named after the key units, are indicated on the plan.

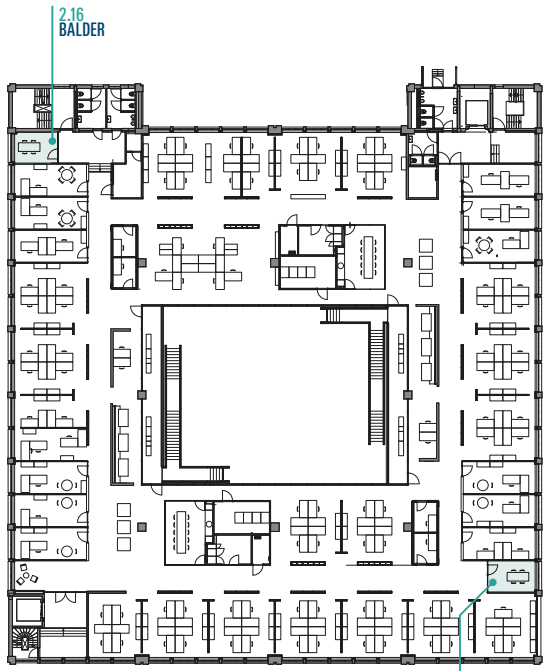

Second floor

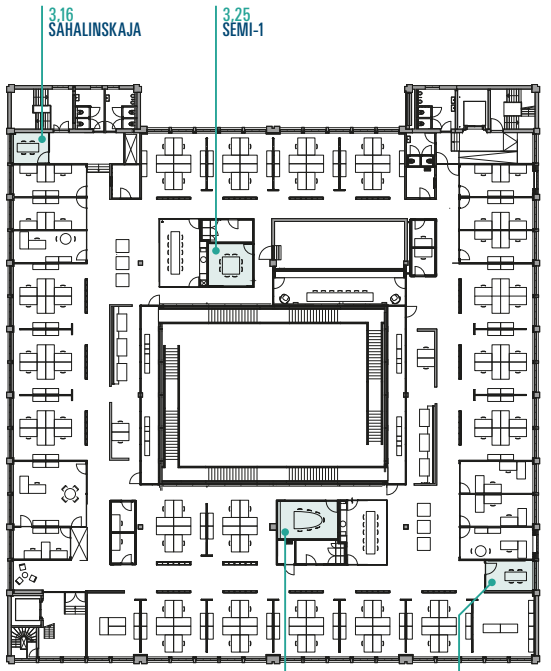

Third floor

MILESTONE 1

SEASHELL

Several versions exist of how Gusto yard became involved in jack-ups. The most telling one may well be the following. Can you design and build us a self-elevating drilling rig? asked the oil company Shell when visiting Gusto's management. Yes, we can... What is it? was the response. Not only were the yard management and all the employees so confident, the clients were also convinced of the truth contained in this dialogue.

Patent No. 850143

Elizabeth the Second by the Grace of God of the United Kingdom of Great Britain and Northern Ireland and of Her other Realms and Territories Queen, Head of the Commonwealth, Defender of the Faith. To all to whom these presents shall come greeting:

WHEREAS A.F. Van Gusto t/h Firma A.F. Smulders, a limited liability company organized and existing under the laws of Holland, of p. Maasdijk, Schiedam, Holland

(hereinafter referred to as the said applicant) have prayed that a patent may be granted unto them for the sole use and advantage of an invention for apparatus for producing a relative linear displacement between a column and a movable body by means of hydraulic pressure

AND WHEREAS the said applicants (hereinafter together with their successors, and assigns, or any of them referred to as the patentees) have declared that there is no lawful ground of objection to the grant of a patent unto them:

AND WHEREAS the complete specification has particularly described the invention:

AND WHEREAS We, being willing to encourage all inventions which may be for the public good, are graciously pleased to condescend to their request:

KNOW YE, THEREFORE, that We, of our especial grace, certain knowledge, and mere motion do by these presents, for Us, our heirs and successors, give and grant unto the said patentees our especial licence, full power, sole privilege, and authority, that the said patentees by themselves, their agents, or licensees, and no others, may subject to the conditions and provisions prescribed by any statute or order for the time being in force at all times hereafter during the term of years herein mentioned, make, use, exercise and vend the said invention within our United Kingdom of Great Britain and Northern Ireland, and the Isle of Man, and that the said patentees shall have and enjoy the whole profit and advantage from time to time accruing by reason of the said invention during the term of sixteen years from the date hereunder written of these presents: AND to the end that the said patentees may have and enjoy the sole use and exercise and the full benefit of the said invention, We do by these presents for Us, our heirs and successors, strictly command all our subjects whatsoever within our United Kingdom of Great Britain and Northern Ireland, and the Isle of Man, that they do not at any time during the continuance of the said term either directly or indirectly make use of or put in practice the said invention, nor in any wise imitate the same, without the consent, licence or agreement of the said patentees in writing under their hands and seals, on pain of incurring such penalties as may be justly inflicted on such offenders for their contempt of this our Royal command, and of being answerable to the patentees according to law for their damages thereby occasioned:

PROVIDED ALWAYS that these letters patent shall be revocable on any of the grounds from time to time by law allowed as grounds for revoking letters patent granted by Us, and the same may be revoked and made void accordingly:

PROVIDED ALSO that nothing herein contained shall prevent the granting of licences in such manner and for such considerations as may may be law be granted: AND lastly, We do by these presents for Us, our heirs and successors, grant unto the said patentees that these our letters patent shall be construed in the most beneficial sense for the advantage of the said patentees.

IN WITNESS whereof We have caused these our letters to be made patent as of the twentieth day of November one thousand nine hundred and fifty-eight and to be sealed.

Comptroller-General of Patents, Designs, and Trade Marks

UK Patent for the jacking system

The jacking system arrangement

Of course, this is not exactly how it happened. Gusto yard already had contacts with the Shell Group for several decades. In the 1920s they built several small tankers for subsidiaries of that group. When Guust Smulders was studying technology in Zürich, he married the daughter of one of the directors of Shell Switzerland and for some time he worked at Shell's offices both in The Hague and in London; those contacts were fostered by the yard. Together with Gusto's fame in designing and building successfully challenging novel pieces of equipment, those contacts led the Shell Group to order various oil related pieces of equipment from Schiedam, such as nine drilling barges for Nigeria, a large floating crane to transport entire drilling platforms in Lake Maracaibo and some aluminium high-speed hydrofoil crew boats, again for Venezuela. Gusto was thus well aware of what was going on in the rapidly developing offshore industry. Actually, in co-operation with Shell, they started in-house studies on elevating systems quite a long time before the question mentioned above ever came up. It was not only a 'paper' study, but also involved a considerable amount of experimental work on the behaviour of special steel in such unusual circumstances.

When Shell Qatar lost its American designed drilling jack-up Qatar 1 in December 1956 and needed a replacement, Gusto was well prepared for such a challenge, and it also fitted perfectly into its existing approach to the technical world. In June 1957 the Bataafsche Internationale Petroleum Maatschappij, part of the Shell Group, ordered a relocatable drilling platform (the term self-elevating was not yet used in publicity) from Gusto, destined for its concessions in Qatar. Safety was a significant issue, spurred by the loss of Qatar 1. In addition, for commercial reasons, Shell wanted systems that did not infringe upon existing patents (in America or elsewhere).

> "CAN YOU DESIGN AND BUILD US A SELF-ELEVATING DRILLING RIG? YES, WE CAN... WHAT IS IT?"

Unit description

The resulting Seashell was the first jack-up designed and built outside the USA. It was among the largest of its kind in the world at the time. The 8 square legs had a length of 65 meters, allowing operation in 5 to 30 meters water depth with an airgap of up to 15 meters. Outfitting included drilling equipment to reach a depth of 15,000 feet, accommodation for 70 crew members, a travelling gantry crane with 75 ton lifting capacity and a foldable helideck in order not to be hit by waves when under tow.

With safety, novelty and further improvements in mind Gusto, in cooperation with Shell, designed Seashell and its elevating system. Eight legs obviously offered a lot of additional safety in the event of punch-through, mechanical failure etc. Moreover, pre-loading by means of unloading legs, shortened the time needed for placing the jack-up on location.

The elevating system used a discontinuous, positive engagement, hydraulic elevating system. The holding catches were adjustable in height by means of additional cylinders. As a result, all eight working catches could be re-engaged simultaneously making the jacking operation smooth and fast. Both the adjustable holding catches and the avoidance of secondary loads in the elevating system (by the arrangement of teeth extending from square legs) were patented.

Analysis of the jack-up and its elevating system was all done by manual calculations using first principles from mechanical and hydrodynamic disciplines. Much theoretical and experimental research was used to provide the best results. Some aspects incorporated into the design, such as the secondary bending of the legs due to deflections, the Pδ-effect, and avoidance of resonance in waves, were only incorporated into the industry standard analysis three decades later.

Seashell was launched from the slipway in Schiedam on March 7, 1959. On 1 September 1959, the vessel left Schiedam for Qatar. The cost of building the platform was over 3 million Dutch guilders.

Offshore Footprint

The jacking system in the same form was used on the two crane jack-ups Kraanvogel and Lepelaar used to build the IJmuiden pier extension in 1962. The Seashell was the first of a total of some 35 jack-ups using this jacking technology built by or under license from GustoMSC in 7 countries over the period from 1959 to 2002.

MAIN CHARACTERISTICS

Length	63.4 m
Breath	32.0 m
Depth	5.3 m
Leg length	67.0 m

SEASHELL

THE LARGEST OF ITS KIND IN THE WORLD AT THE TIME.

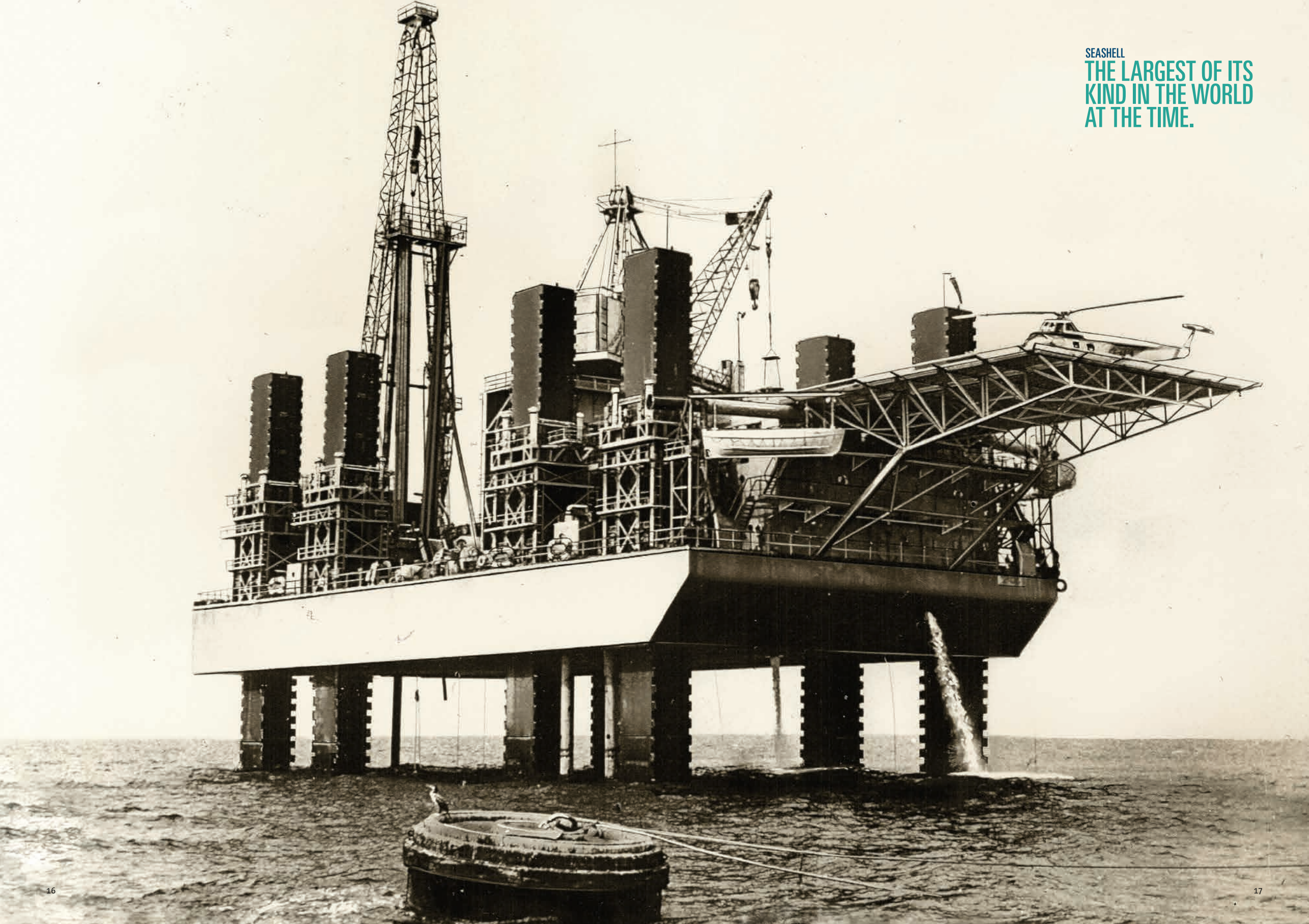

MILESTONE 2

PELICAN

In 1969, the French oil company CFP (Total) offered the French drilling contractor Foramer a contract for a new to be developed Dynamically Positioned (DP) drillship for deeper water. At that time there was only one large DP drillship in service, the Glomar Challenger, built especially for very deep water drilling for the American Deep Sea Geological Program.

Foramer approached Gusto for the design of such a vessel based on the requirements of CFP. Together they were able to make an acceptable offer and from 1970 to 1972 the unit was developed, built and successfully tested. It became the first full DP, anchorless deep water drilling vessel for oil & gas in the world. The computer-controlled DP system was developed from scratch by the French company Alcatel, assisted by Gusto with many calculations and tests carried out in collaboration with TNO and MARIN.

Unit description

The Pelican had many more innovative features, such as large storage spaces below deck, guide-line free handling of seabed systems, deep diving system, heave compensation systems, automated drilling systems and power management and control systems. All these systems are nowadays well known, but at that time they were not readily available in the market, and needed to be developed by the Gusto design team and its many subcontractors. Comfortable accommodation was provided for the crew, some important new safety and redundancy issues were satisfactorily resolved, and approval obtained from the Oil Company, relevant authorities and classification society.

The main features of the Pelican are: worldwide operations (both arctic and tropical), 3 months' supply for 2 average or 1 deep well, capable of working in water depths between 50 and 300 meters in 5 meter significant waves, with easy, safe and rapid handling of all drilling systems.

Pelican has proved its reliability and versatility many times, in particular offshore Labrador during the summer and fall of 1973, where at one time she was surrounded by 19 icebergs within a 12 mile range.

Offshore footprint

This successful design resulted in the Pelican class with 4 repeat orders for the Gusto yard; in addition some seven vessels of this class have been built under license at yards in the UK, Finland, Japan and India. Drilling and maximum water depth capabilities have been increased over time. The Pelican class drilling vessel became a household name in the Oil & Gas industry and was the basis for further DP drillship development by GustoMSC. After more than 40 years, 9 out of a total of 12 vessels of this class are still in operation.

Launching Pelican from the Gusto slipway

MAIN CHARACTERISTICS

Length	149.4 m
Breadth	21.3 m
Depth	12.5 m
Draft	7.3 m
Displacement	15,000 t

MILESTONE 3

VIKING PIPER

During the early 1970s a conceptual design of a novel pipe laying barge was made by R.J. Brown and Associates (RJBA), recently incorporated into the IHC Offshore Group to which Gusto also belonged. Being a semi-submersible floater with an unconventional stern ramp instead of a stinger, it was designated the Third Generation Lay Barge, designed for laying pipe in 1,200 ft of water depth in the North Sea. RJBA had a strong pipeline design but no naval architectural background, therefore it relied on Gusto to design the semi-submersible hull with the ship systems.

Viking Piper on its first job: the Ninian pipeline

As Castoro 7 (ex-Viking Piper)

Unit description

Two starting points were considered essential:

- The vessel should be single-task, so no combination of pipe layer and crane barge as was common in the Gulf of Mexico and;
- The laying speed should be as high as possible in order to be able to make best use of weather windows.

The first point allowed for a work deck over the full length and width of the unit, making it possible to have a large pipe storage area on-deck and to continue pipe laying even when supplying the unit was no longer feasible in deteriorating weather conditions. The large deck was also provided with an optimum pipe fabrication lay-out, equipped for double jointing on-board, and this achieved the second point by doubling the laying speed.
It was well-known that a semi-submersible offered the best motion behaviour, thus maximizing the operational weather window. At the same time, such design inherently offers a large deck area with the benefits mentioned above. Using the deck mainly for pipe storage and pipeline fabrication meant that accommodation and power generation had to be located below on a second deck. This resulted in a box-type superstructure, rather than the beam grid supporting various deck houses which was common in semi-submersible design at the time. The relatively simple flat plate structure was also used in the rectangular columns and pontoons. Viking Piper was the earliest semi-submersible taking advantage of the structural benefits of this box-type concept which has been seen in many GustoMSC and other semis since then. All these considerations made Viking Piper by far the biggest semi-submersible of its day.

Locating the fire line for the pipe at the unit's centre line, rather than at the side, was a good way of reducing pipe stresses due to roll. Other motions were better accommodated with a fixed guide structure instead of the traditional hinged stinger. In storm conditions this so-called stern ramp could be retracted and thus raised above the waves, so avoiding impacts.
Fourteen anchor winches were foreseen for positioning and relocating the unit. Advancing the barge over one double joint length was planned to take place as frequently as every 5 minutes.

This could no longer be performed with manual winch control, the industry standard of the day. An automatic winch control system was therefore developed in cooperation with AEG in order to achieve this.
Hardly any design rules existed for this large type of semi-submersible. In close cooperation with the classification society Bureau Veritas, new targets had to be set for aspects such as intact and damaged stability, material selection and fabrication standards, etc.

The decision to build the unit was taken by Viking Offshore (a consortium formed by IHC initiative and consisting of French, Norwegian and British investors) late in 1972. Fabrication of the barge had to be performed by the Gusto yard in Schiedam, the Netherlands. Given the huge dimensions, far bigger than anything the yard had constructed before, it was clear from the start that large sections would have to be built by other yards (in and outside the Netherlands), transported to Schiedam and then assembled with the unit afloat. The original idea to do this with a number of simultaneously acting floating sheerlegs had to be abandoned as too complex. Instead, a completely novel idea was introduced. A dedicated construction jack-up Assembler was built, similar to, but also quite different from, those built earlier by the yard. The dedicated investment was recouped when the jack-up was afterwards converted into two “normal” jack-ups and both were sold to a civil construction company.

Offshore footprint

The entire design and fabrication of the unit contributed to Gusto’s knowledge about building huge complicated structures with success. The unit was delivered in 1975 and had a successful first season. Over 40% of BP's 36 inch crude line to Ninian Field was laid between late August and October 1975. It has been in operation for 40 years, showing the high quality of the unit then produced.

MAIN CHARACTERISTICS

Length	162.0 m
Breadth	58.5 m
Depth	33.2 m
Displacement	50,000 t

VIKING PIPER WAS THE EARLIEST SEMI-SUBMERSIBLE TAKING ADVANTAGE OF THE STRUCTURAL BENEFITS OF THE BOX-TYPE CONCEPT WHICH HAS BEEN SEEN IN MANY GUSTOMSC AND OTHER SEMIS SINCE THEN.

MILESTONE 4

BALDER AND HERMOD

During 1976 Heerema Contractors asked Gusto to design a 3,000 ton offshore crane for a newly developed semi-submersible crane vessel. Gusto had been designing and delivering offshore cranes previously, but at that time the largest had a 2,000 ton capacity. Heerema had been involved in the Viking Piper lay barge development and considered that such a unit could also serve as a large crane barge, suitable for worse weather conditions than would be possible with a conventional crane vessel, extending operating capabilities in North Sea weather conditions.

The stability problem encountered with such high crane loads on a semi-submersible was solved by a patented water ballast system, and in the first instance Heerema therefore only came to Gusto for the heavy crane design. But Gusto, with its experience from the Viking Piper, was also interested in the design of the semi-submersible. Heerema had no objection at all to providing its semi-submersible design for evaluation and comments.

Unit description

Gusto came up with a completely fresh and new design, which was no longer dependent on the water ballast system. That system could still be used, of course, but was no longer a necessity and therefore the crane unit became much safer in the event of any failure of the system. The basic idea was that the weather conditions for offshore crane operations, such as wind speed, are much less severe than those for pipe laying or drilling operations, for which the existing semi-submersibles were designed. The columns and waterline areas could therefore be made much larger and the unit made much more simple and sturdy, with a simplified horizontal bracing system only. Heerema was much impressed and adopted the Gusto design for its unit.

The offshore cranes (one for 3,000 tons and one for 2,000 tons) to be placed on two corners of the barge, were also developed by Gusto. The Gusto yard was no longer in a position to build such a large semi-submersible, and also preferred not to build the large cranes. It was therefore proposed to Heerema that the semi-submersible and the cranes should be built in Japan, the latter under licence of Gusto. When Heerema received the Japanese quotations for the newly developed semi-submersible and offshore cranes, the price level was about half of that from European quotations and they made the wise decision to order two units in Japan for the price of one in Europe, thereby becoming market leader in this field.
The semi-submersible hulls were built by Mitsui, the cranes by Sumitomo.

Offshore footprint

The Balder and its sister unit Hermod were delivered in 1978 and have been operating very successfully ever since. They were the first offshore twin crane semi-submersibles and set the stage for heavy offshore crane operations ever since, to be followed by several other units. The Balder and Hermod are still in operation. Over time the hulls and the cranes have been extensively upgraded and the Balder is now fitted with a deepwater pipelay system. GustoMSC has always been involved in the upgrades of these units and their offshore cranes.

Balder installing Independence Hub

Balder in a two crane lift installing a jacket topside

MAIN CHARACTERISTICS

Length	137.0 m
Breadth	86.0 m
Depth	41.5 m
Displacement	102,500 t

MILESTONE 5

DIRK

Marine Structure Consultants (MSC) was founded in 1977 as part of the Boskalis Westminster Group of Companies as an independent offshore consultancy and engineering firm by a group of engineers from the Gusto yard. They observed the problems of the Dutch shipbuilding industry and foresaw the closure of the Gusto yard. Their knowhow and expertise may have been well known, but at the start of the new company they were still unable to present potential clients with a track record as designers of proven mobile offshore units.

Within the Boskalis Group, Dirk Verstoep – a civil construction firm – needed a Self-Elevating Platform (SEP) for harbour works and came to the new sister company MSC for the design.

Unit description

MSC started in first instance with designing its own jacking system, an improvement on the well-known and proven Gusto hydraulic system, but now using a pin and hole instead of the Gusto catch and teeth arrangement. Together with the new leg design, this resulted in a smoother and cheaper system, with less current and wave resistance for the legs. This system was patented in 1977 and used for the first time for the simple and sturdy SEP designed and built for Dirk Verstoep.

After approval by the board of Boskalis, MSC contracted out the construction of the SEP to the Dutch shipyard Boele Bolnes and it was turnkey delivered to Dirk Verstoep in 1978 by MSC. The SEP was named Dirk after the founder of the Dirk Verstoep firm. The Dirk has been operating successfully for this firm for many years. After 37 years it is still active as Heron and now operated by a Royal Oysters Group company in the Arabian Gulf.

Offshore footprint

For MSC this project was a breakthrough, as a proven reference for its jacking system and jack-up designs of the SEA series. It provided access not only to the civil construction market, but also to the offshore Oil & Gas market. It almost directly resulted in a project for NAM, for the design of a much larger jack-up for offshore accommodation in the Dutch sector of the North Sea, using the same jacking technology but this time with larger and more capable legs and jacking systems. This resulted in the construction, again at the Boele Bolnes Yard, of the Seafox 1 which was delivered to its owner Seafox in 1979.

Up to the present time, this development has resulted in some 36 jack-ups using the GustoMSC pin-in-hole jacking technology, for square, tubular as well as lattice construction legs and for capacities ranging from the original 900 ton preload capacity for the Dirk to the 9,000 ton preload capacity for the jack-ups of the current NG-9000C series.

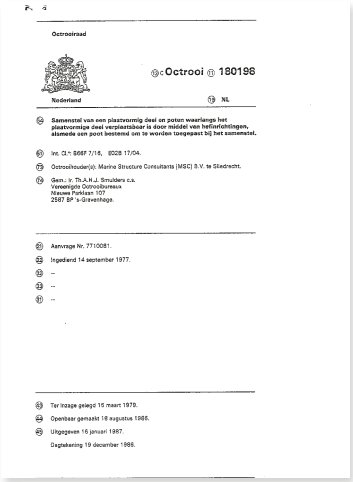

Octrooiraad

Nederland

(19) Octrooi (11) 180196

(19) NL

(54) Samenstel van een plastvormig deel en poten waarlangs het plastvormige deel verplaatsbaar is door middel van hefinrichtingen, alsmede een poot bestemd om te worden toegepast bij het samenstel.

(51) Int. Cl.: B66F 7/16, E02B 17/04.

(73) Octrooihouder(s): Marine Structure Consultants (MSC) B.V. te Sliedrecht.

(74) Gem.: ir. Th.A.H.J. Smulders c.s.
Verenigde Octrooibureau
Nieuwe Parklaan 107
2587 BP s-Gravenhage.

(21) Aanvrage Nr. 7710081.

(22) Ingediend 14 september 1977.

(23) –

(33) –

(31) –

(43) Ter inzage gelegd 16 maart 1979.

(44) Openbaar gemaakt 16 augustus 1980.

(47) Uitgegeven 16 januari 1987.

Dagtekening 19 december 1986.

MSC jacking system patent

MAIN CHARACTERISTICS

Length	45.0 m
Breadth	23.5 m
Depth	4.2 m
Leg length	50.0 m

MILESTONE 6

DYVI EPSILON

Early in 1979, the NAM together with Neddrill asked MSC to investigate the advantages and disadvantages of several types of large drilling jack-ups for use in North Sea conditions. Up to that time, MSC had been successfully concentrating on smaller civil construction and accommodation jack-ups, but this chance to enter the large drilling jack-up market was not to be missed.

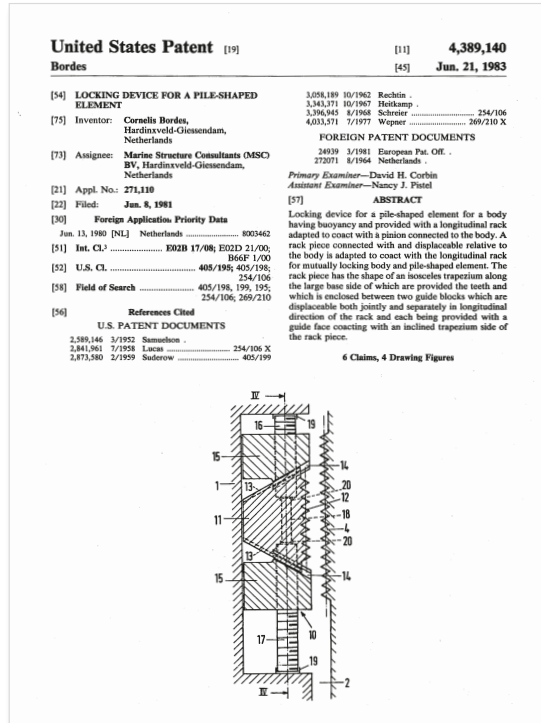

United States Patent [19]
Bordes
[11] 4,389,140
[45] Jun. 21, 1983

[54] LOCKING DEVICE FOR A PILE-SHAPED ELEMENT
[75] Inventor: Cornelis Bordes, Hardinxveld-Giessendam, Netherlands
[73] Assignee: Marine Structure Consultants (MSC) BV, Hardinxveld-Giessendam, Netherlands
[21] Appl. No.: 271,110
[22] Filed: Jun. 8, 1981
[30] Foreign Application Priority Data
Jun. 13, 1980 [NL] Netherlands 8003462
[51] Int. Cl.³ E02B 17/08; E02D 21/00; B66F 1/00
[52] U.S. Cl. 405/195; 405/198; 254/106
[58] Field of Search 405/198, 199, 195; 254/106; 269/210
[56] References Cited
U.S. PATENT DOCUMENTS
2,589,146 3/1952 Samuelson .
2,841,961 7/1958 Lucas ..... 254/106 X
2,873,580 2/1959 Suderow 405/199
3,058,189 10/1962 Rechtin .
3,343,371 10/1967 Heitkamp .
3,396,945 8/1968 Schreier 254/106
4,033,571 7/1977 Wepner ..... 269/210 X
FOREIGN PATENT DOCUMENTS
24939 3/1981 European Pat. Off. .
272071 8/1964 Netherlands .
Primary Examiner—David H. Corbin
Assistant Examiner—Nancy J. Pistel
[57] ABSTRACT
Locking device for a pile-shaped element for a body having buoyancy and provided with a longitudinal rack adapted to coact with a pinion connected to the body. A rack piece connected with and displaceable relative to the body is adapted to coact with the longitudinal rack for mutually locking body and pile-shaped element. The rack piece has the shape of an isosceles trapezium along the large base side of which are provided the teeth and which is enclosed between two guide blocks which are displaceable both jointly and separately in longitudinal direction of the rack and each being provided with a guide face coacting with an inclined trapezium side of the rack piece.
6 Claims, 4 Drawing Figures

Leg fixation system patent

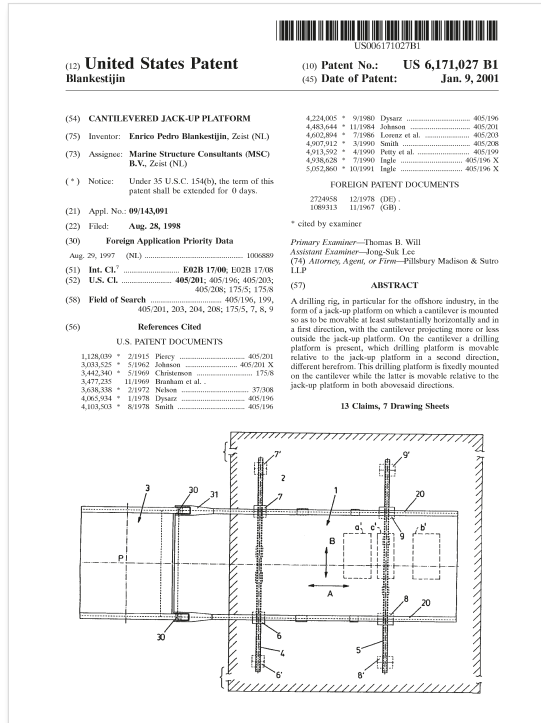

US006171027B1
(12) United States Patent
Blankestijn
(10) Patent No.: US 6,171,027 B1
(45) Date of Patent: Jan. 9, 2001

(54) CANTILEVERED JACK-UP PLATFORM
(75) Inventor: Enrico Pedro Blankestijn, Zeist (NL)
(73) Assignee: Marine Structure Consultants (MSC) B.V., Zeist (NL)
(*) Notice: Under 35 U.S.C. 154(b), the term of this patent shall be extended for 0 days.
(21) Appl. No.: 09/143,091
(22) Filed: Aug. 28, 1998
(30) Foreign Application Priority Data
Aug. 29, 1997 (NL) 1006889
(51) Int. Cl.⁷ E02B 17/00; E02B 17/08
(52) U.S. Cl. 405/201; 405/196; 405/203; 405/208; 175/5; 175/8
(58) Field of Search 405/196, 199, 405/201, 203, 204, 208; 175/5, 7, 8, 9
(56) References Cited
U.S. PATENT DOCUMENTS
1,128,039 * 2/1915 Piercy 405/201
3,033,525 * 5/1962 Johnson ..... 405/201 X
3,442,340 * 5/1969 Christenson 175/8
3,477,235 11/1969 Bromham et al. .
3,638,338 * 2/1972 Nelson 37/308
4,065,934 * 1/1978 Dysarz 405/196
4,103,503 * 8/1978 Smith 405/196
4,224,005 * 9/1980 Dysarz 405/196
4,483,644 * 11/1984 Johnson 405/201
4,602,894 * 7/1986 Lorenz et al. 405/203
4,907,912 * 3/1990 Smith 405/208
4,913,592 * 4/1990 Petty et al. 405/199
4,938,628 * 7/1990 Ingle ..... 405/196 X
5,052,860 * 10/1991 Ingle ..... 405/196 X
FOREIGN PATENT DOCUMENTS
2724958 12/1978 (DE) .
1089313 11/1967 (GB) .
* cited by examiner
Primary Examiner—Thomas B. Will
Assistant Examiner—Jong-Suk Lee
(74) Attorney, Agent, or Firm—Pillsbury Madison & Sutro LLP
(57) ABSTRACT
A drilling rig, in particular for the offshore industry, in the form of a jack-up platform on which a cantilever is mounted so as to be movable at least substantially horizontally and in a first direction, with the cantilever projecting more or less outside the jack-up platform. On the cantilever a drilling platform is present, which drilling platform is movable relative to the jack-up platform in a second direction, different herefrom. This drilling platform is fixedly mounted on the cantilever while the latter is movable relative to the jack-up platform in both abovesaid directions.
13 Claims, 7 Drawing Sheets

X-Y cantilever patent

This study evolved into the development of a basic design for a four leg cantilever drilling jack-up to be operated by Neddrill under a 15 year contract with NAM. Despite the higher cost to build, a four legged jack-up was chosen in view of the intrinsically higher safety during installation and the shorter duration of the preloading process. This jack-up design was eventually built by Hitachi in Japan as Neddrill 4 and is now operated as HZ1 by Paragon Offshore.

Based on the experience gained in this development, which was partly driven by the preferences of the Drilling Contractor and the Oil Company, MSC believed that a more economical solution for drilling operations in adverse weather conditions would be a three legged unit with a cantilevered drilling system and a leg fixation system.

Unit description

As a result, MSC started to develop the design of its own class of three legged drilling jack-ups, with a cantilever drilling system, triangular platform with equal leg spacing and a leg fixation system. This design was called CJ (for Cantilever Jack-up) followed by a number indicating the horizontal leg spacing in meters. This number gives a good indication of the size and capabilities of the unit. At the same time MSC developed its own leg fixation system, which was patented in 1980.

The first design presented in 1980 was the CJ46 and Dyvi Offshore immediately showed a strong interest and quickly thereafter concluded a contract with the CNIM Yard in the south of France for the construction of two units, Dyvi Epsilon and Dyvi Sigma, on the bases of a license from MSC for the basic design of the jack-up and for the fixation system. Before the first jack-up was finished, Neddrill ordered a third CJ46 from the same yard, which became the Neddrill 3. The first unit delivered was the Dyvi Epsilon in 1981. These three CJ46 jack-ups are still successfully working in the southern North Sea, now operated by Paragon Offshore under the names C461, C462 and C463.

Offshore footprint

In the following years the CJ series was expanded with ever-larger units – the CJ50, the CJ62 and the CJ70 – enabling the drilling industry to operate jack-ups in deeper water and harsher environments.

Over the years, in addition to the development of new CJ designs and updating the existing CJ designs, MSC started to fabricate the fixation systems under its own control and to supply them directly to the construction yard.
A very important aspect in the further success of the CJ series was the development of the X-Y-cantilever in the mid-nineties. The simple idea to fix the drill floor to the cantilever and move the combination in both the longitudinal and the transverse direction on the main deck, instead of the classic way of moving the cantilever longitudinally on the main deck and the drill floor transversely on the cantilever, proved to be a feature that would distinguish the CJ design from the competition. An additional feature of the X-Y cantilever is that it is placed at some 3.5 m above the main deck of the jack, creating a significant amount of additional free deck space. This X-Y cantilever required a special X-Y Skidding System, and this system was developed and patented by MSC in 2000.

Maersk Drilling was the launching customer for the first CJ with X-Y cantilever, the CJ70 Maersk Innovator. MSC also supplied the X-Y Skidding System directly to the yard following the same design and supply concept as used for the fixation system. Since then, all CJ jack-ups have been equipped with the X-Y cantilever.

In the GustoMSC Alliance years, the design and supply concept was further extended by equipping the CJ units with a Gusto Rack & Pinion Jacking System from 2006 onwards.
To date some 65 CJ type jack-ups based on a GustoMSC license have been built or are under construction, the proof of a very successful and well recognized design in the offshore history, with a current market share of about 25% of the new builds.

MAIN CHARACTERISTICS

Length	55.4 m
Breadth	62.0 m
Depth	7.5 m
Leg length	104.0 m

THE CHANCE TO ENTER THE LARGE DRILLING JACK-UP MARKET WAS NOT TO BE MISSED.

MILESTONE 7

KOLSKAYA AND SAKHALINSKAYA

In the early 1970s, the Gusto yard had an extensive and successful track record in the design and construction of jack-ups. Units were built for both drilling and civil construction purposes. They all had one thing in common: the elevating system consisted of a discontinuous hydraulic system.

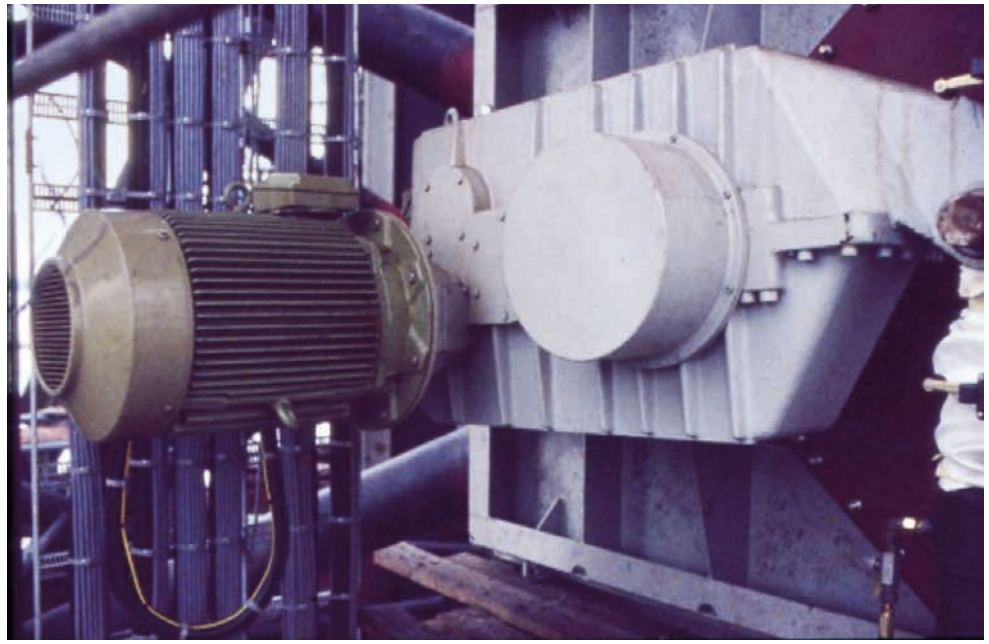

The electric driven Rack & Pinion Jacking System with hydraulic load sharing system

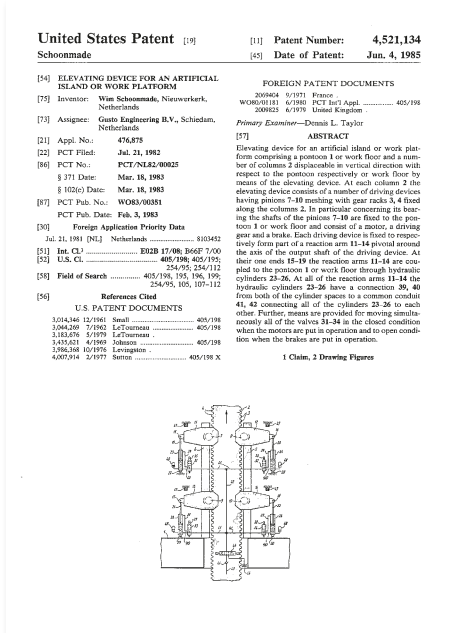

United States Patent [19]
Schoonmade

[11] Patent Number: 4,521,134
[45] Date of Patent: Jun. 4, 1985

[54] ELEVATING DEVICE FOR AN ARTIFICIAL ISLAND OR WORK PLATFORM

[75] Inventor: Wim Schoonmade, Nieuwerkerk, Netherlands

[73] Assignee: Gusto Engineering B.V., Schiedam, Netherlands

[21] Appl. No.: 476,875
[22] PCT Filed: Jul. 21, 1982
[86] PCT No.: PCT/NL82/00025
§ 371 Date: Mar. 18, 1983
§ 102(e) Date: Mar. 18, 1983
[87] PCT Pub. No.: WO83/00351
PCT Pub. Date: Feb. 3, 1983

[30] Foreign Application Priority Data
Jul. 21, 1981 [NL] Netherlands 8103452

[51] Int. Cl.³ E02B 17/08; B66F 7/00
[52] U.S. Cl. 405/198; 405/195; 254/95; 254/112
[58] Field of Search 405/198, 195, 196, 199; 254/95, 105, 107–112

[56] References Cited
U.S. PATENT DOCUMENTS

3,014,346	12/1961	Small	405/198
3,044,269	7/1962	LeTourneau	405/198
3,183,676	5/1979	LeTourneau	
3,435,621	4/1969	Johnson	405/198
3,986,368	10/1976	Levingston	
4,007,914	2/1977	Sutton	405/198 X

FOREIGN PATENT DOCUMENTS

2009404	9/1971	France	
WO80/01181	6/1980	PCT Int'l Appl.	405/198
2009825	6/1979	United Kingdom	

Primary Examiner—Dennis L. Taylor

[57] ABSTRACT

Elevating device for an artificial island or work platform comprising a pontoon **1** or work floor and a number of columns **2** displaceable in vertical direction with respect to the pontoon respectively or work floor by means of the elevating device. At each column **2** the elevating device consists of a number of driving devices having pinions **7–10** meshing with gear racks **3, 4** fixed along the columns **2**. In particular concerning its bearing the shafts of the pinions **7–10** are fixed to the pontoon **1** or work floor and consist of a motor, a driving gear and a brake. Each driving device is fixed to respectively form part of a reaction arm **11–14** pivotal around the axis of the output shaft of the driving device. At their one ends **15–19** the reaction arms **11–14** are coupled to the pontoon **1** or work floor through hydraulic cylinders **23–26**. At all of the reaction arms **11–14** the hydraulic cylinders **23–26** have a connection **39, 40** from both of the cylinder spaces to a common conduit **41, 42** connecting all of the cylinders **23–26** to each other. Further, means are provided for moving simultaneously all of the valves **31–34** in the closed condition when the motors are put in operation and to open condition when the brakes are put in operation.

1 Claim, 2 Drawing Figures

The IHC Holland group, of which Gusto yard formed the main offshore company, acquired a USA company designing and building jack-ups with hydraulically driven rack-and-pinion (R&P) elevating systems. Commercially the take-over was not the success IHC had hoped for. Technically, however, it introduced Gusto to this type of elevating units. The construction of one of the USA contracted units was actually carried out in Schiedam, the Maersk Explorer in 1976. A second unit, Maersk Endeavour, better adapted to Gusto's owner's updated requirements and Gusto's experience and insights, was constructed in 1982 by the then sister company RDM in Rotterdam.

With these jack-ups Gusto gained experience and developed its own insights for jack-ups with R&P jacking systems.

In the early 1980s this resulted in the design of Kolskaya and Sakhalinskaya. These were drilling jack-ups to be used in probably the most hostile environment then known, i.e. the Barents Sea and the Sea of Okhotsk, both waters belonging to the USSR. These jack-ups were ordered from Rauma Repola in Finland to a design given in license by Gusto Engineering to "Arktikmorneftegazrazvedka". With this order, Gusto Engineering continued its good cooperation with both the Russians and Rauma Repola's newly established dedicated offshore yard in Mäntyluoto, Finland.

Unit description

The harsh conditions were, of course, a main consideration for these units. This constituted very severe requirements for the materials used in accommodation, hull and equipment, ranging from insulation and heating installation to steel plate requirements and, in particular, impact value requirements for the elevating pinions. The experience of the Finnish companies with low temperatures made things possible that were beyond the state-of-the art in jack-up design at that moment. The pinions were cast steel, allowing dimensional accuracies that were not possible with the more common fabrication methods for those systems.

The jack-ups had to comply with the ship-based Russian rules. Several typical jack-up requirements made re-interpretation of the Russian rules mandatory without deviating from their safety philosophy. At the same time compliance was required with both Lloyd's Register and Det Norske Veritas rules for self-elevating platforms. Gusto Engineering succeeded in bringing all these sometimes contradicting requirements together in a well-balanced jack-up design.

Rauma Repola used an exceptional method to assemble the legs. The normal method is to install the lower part first and build up to the top, but Rauma Repola chose to install the top section of the legs first and then build up from below. Both jack-ups were delivered in 1985.

The jacking systems for these jack-ups were electrically driven and provided with a Gusto patented hydraulic load sharing system arranged such that, even when the brakes are engaged, all pinions are loaded to the same level.

Offshore footprint

These Gusto electrically driven Rack & Pinion (R&P) Jacking Systems proved to be the forerunners of the 67 R&P systems that have been delivered to date for GustoMSC CJ and NG jack-up projects.

MAIN CHARACTERISTICS

Hull length	69.3 m
Hull breadth	80.0 m
Depth	8.6 m
Leg length	141.5 m

THINGS WERE MADE POSSIBLE THAT WERE BEYOND THE STATE-OF-THE ART IN JACK-UP DESIGN AT THAT MOMENT.

MILESTONE 8

SEMI 1 AND 2

In the early 80s, Smit International considered options for expanding its offshore activity beyond its traditional towing, transport and supply operations. With the expanding number of offshore platforms – especially in the North Sea – the Inspection, Repair and Maintenance (IRM) market was recognized as the prime target for new and dedicated equipment.

Semi 1

Semi 2

The objective for a viable project was that the investment costs should reflect a day rate of $10,000/day (1985 price levels). Consequently the target construction costs were set at $15 million with a basic set of design criteria:

1. Minimum payload of 1,500 t of which 750 t as deck load
2. Large net deck area of more than 1,000 m2 with a 150 t deck crane at 30 m reach
3. Utilities to accommodate 110 persons and cabins for 89 persons
4. A DP system with joystick control
5. A wire mooring system for 100 m water depth max. Intended regions: North Sea and benign waters.

Unit description

The concept design phase started at MSC early in 1984 and a couple of alternatives were evaluated during vessel selection. The conclusions were:

1. Monohull vessels are suitable for IRM operations but not for installation and construction work, due to limited workability
2. Large semi-submersibles (over 15,000 t displacement) feature good motional behavior and large deck areas but have high operational costs, above the $10,000/d objective
3. Jack-up platforms are cost effective for installation and construction in shallow waters (40 m) but less mobile.

The project team of Smit Int. and MSC opted for the compact semi-submersible which should have a low day rate and be able to compete with the larger monohull vessels. Sizing the unit was based on construction costs of about $15 million. On the basis of in-house information on the split between steel weight costs, it resulted in a 9,000 t displacement compact semi-submersible.

Model testing was performed to verify the motional behavior and to optimize the layout of columns and floaters. Even with such small displacement, the semi could be dimensioned such that good motional behavior could be achieved even in the North Sea. During the final model testing, one of the Smit monohull vessels and the semi-submersible were tested side by side to illustrate the superior characteristics of the semi-submersible design, with in average a 40% higher workability.

A good compromise between operational and survival conditions could be achieved by the innovative approach to make the survival draft equal to the transit draft, thus surviving on the floaters. A typical detail of the design is the orientation of the columns. The forward columns are in longitudinal direction and the aft columns athwart ship direction. This is to obtain good stability within its dimensions and less wave resistance in transit condition.

The idea of the compact semi-submersible was accepted by the different market parties, although the design operations in the North Sea required additional measures such as:

- A full built-in saturation diving spread
- A fully redundant DP system (for operations in Norway up to DP3 level)
- An improved power system
- A 225 ton mast crane at 30 m reach
- A telescopic gangway
- A position mooring system(6 wire spread).

The overall consequence of all this was an increase of the upper deck and an increase of displacement to 10,470 t.

By mid-1985, Smit International had decided to continue with a project for two units and MSC carried out the basic design to enable Smit to have final shipyard prices by the end of 1985.

Van der Giessen-de Noord (presently Royal IHC) was selected on the basis of price and delivery time. Korean shipyards were not attractive on delivery schedule, and building supervision nearby its office was another deciding factor for Smit International.
The first vessel Semi 1 was delivered mid-June 1987 after final sea trials. Regarding the sea trials, one striking operation was carried out during the test full speed ahead to full speed astern. The operator found it easiest just to turn the joystick around 180 degree (no power reduction, no pitch control of thrusters). The thruster people on board turned quite pale, but the thrusters survived this highly unusual trial. The second vessel Semi 2 followed in April 1988.

In the early years, the Semi 1 and Semi 2 operated in the North Sea. Smit International combined operations with Rockwater (a Halliburton company) renaming the units Rockwater Semi 1 and Rockwater Semi 2. As Rockwater had a major operation in the Gulf of Mexico, the units were operated in that region by the late 90s. In this period Halliburton formed a joint venture with Grupo R under the name of Mantenimiento Marino de Mexico. To date both units are still operating in the Gulf of Mexico.

Around 2000, MSC provided the engineering for modifications to the units for accommodation, maintenance and construction support. Consequently the diving spread was removed and the accommodation capacity was increased for both units.

Offshore footprint

These design principles have been the basis for the DSS and OCEAN units.

MAIN CHARACTERISTICS

Length	64.0 m
Breadth	48.7 m
Depth	6.5 m
Displacement	11,250 t

WITH ITS TYPICAL ORIENTATION OF THE COLUMNS, IT OBTAINS GOOD STABILITY WITHIN ITS DIMENSIONS AND LESS WAVE RESISTANCE IN TRANSIT CONDITION.

MILESTONE 9

PRIDE AFRICA

After a long period with no activity in drillship designs, the market for deep water drilling units awakened again in the mid-nineties. Gusto Engineering started a deepwater DP drillship design on the basis of interest from the ship owner Seatankers, using the midship of the Anadyr, a Russian submarine carrier as the midship for the Gusto 10,000 drillship design.

Thruster Retrieval System on Pride Africa and Pride Angola

The midship section became available when the forward and aft part of that vessel were used to build an FPSO vessel, the Petrojarl 1. In the conversion, the midship section of the Anadyr would be converted to a drillship by adding a new bow-section with accommodation, new aft ship, thruster system, power generation and drilling equipment.

In 1996, drilling company Foramer, the launching customer of the successful Pelican drillship series, was expecting invitations to tender from Petrobras and Elf Angola and approached Gusto to develop a new deep water drillship design. Seatankers also saw this as an opportunity and sold the Anadyr midship to Foramer.
Gusto continued working on the design of the large Gusto 10,000 drillship, but now in cooperation with Foramer. Based on past experience with the Pelican drillships, Foramer contributed a wealth of operational experience, preferred drilling equipment lay out, arrangements and capacities for deep water drilling.

The initial requirements for the Pride Africa design were:

- A ship-shaped dynamically positioned drilling unit.
- A vessel larger than the Pelican series to accommodate the variable load capacity required for deep water operations.
- Equipped with modern heavy duty drilling systems.
- Maximize available space on board.
- Optimized motion characteristics and station keeping.

Unit description

During the design phase, the following features were implemented:

- Riser stored in an open hold, forward of the drillfloor, inside the hull.
- Mud pits arranged at 2 different levels in the hull, aft of the drillfloor.
- Motion characteristics 50% better than the Pelican series.
- DP2 level of redundancy.
- The thrusters protruding under the hull are retractable into the hull, driven by a rack and pinion system of the specially designed Gusto Thruster Retrieval System.
- AC drive-variable speed used for thrusters and drilling motors.
- Double T-shaped cellar deck: the forward T-shape one for BOP maintenance, storage and handling, the aft T-shape for X-mas tree preparation and handling.
- Dual handling capability for preparation and racking in setback of stands of drill pipes and casing diameter up to 9 5/8" while drilling, stand-building remotely controlled from the Drillmaster's cabin.
- 130 PAX living quarters.

The Basic Design was developed by Gusto during the first half of 1997 and submitted to Classification Society DNV for approval. During the course of the project Foramer was taken over by the drilling contractor Pride (USA). At the end of 1997, in a competition between 10 shipyards, Hyundai MIPO Dockyard, at Ulsan, Korea was selected to build the Pride Africa and a second vessel 6 months later: Pride Angola. For the Pride Angola, GustoMSC provided the design for a new build midship. The ships were delivered mid and end 1999 respectively.

Offshore footprint

The Pride Africa was the first offshore vessel fitted with the unique Gusto Thruster Retrieval System.
These two vessels proved to be the basis of a series of 20 drillships, 18 of which were built at Hyundai Heavy Industries.

MAIN CHARACTERISTICS

Length	196.0 m
Breadth	30.0 m
Depth	19.0 m
Displacement	43,000 t

THE PRIDE AFRICA WAS THE FIRST OFFSHORE VESSEL FITTED WITH THE UNIQUE GUSTO THRUSTER RETRIEVAL SYSTEM.

MILESTONE 10

MAERSK EXPLORER

In the late 70s and early 80s, the offshore industry saw a huge increase in activity. The quest for oil and gas resulted in a building boom for jack-ups as well as semi-submersibles.

In the early 80s there was a tendency towards two basic designs for semi-submersibles: either for "deeper waters" and "harsher environments" or a more compact semi-submersible for moderate environments. At that time MSC developed the compact drilling semi-submersible called DSS20, with the "20" standing for a displacement of 20,000 tons, a variable deck load of 2,000 tons and a drilling depth of 20,000 ft. This was MSC' answer to the Sedco 600 series.

In the mid-80s, KeppelFELS constructed the Ekhabi, a CJ50 designed by MSC. Due to these good contacts and the availability of the DSS20 design, Keppel FELS showed interest in a joint development of a compact semi-submersible.

Unit description

A joint project team was created and after a first round of discussions the design criteria were set.

The basic concept of the four column and box deck structure was maintained. This box deck structure created a lot of useful and effective deck area, within limited overall dimensions, and its buoyancy improved damage stability characteristics. Secondly, the box deck structure was a self-supporting structure that did not need deck supporting braces. A comparison between this box structure and a "Texas deck" style structure appeared to result in the same steel weight, while with the box deck structure the number of critical connection points was significantly reduced and seen as an advantage for the fabrication of the unit.

For construction of the unit, the straight forward construction (flat panels, rectangular cross sections) particularly appealed to KeppelFELS as normal shipyard standards and practices could be applied during the panel construction, pre-assembling and final assembly. This provided a significant reduction in manhours per ton of steel. With shipyard and design team working as one dedicated team, the yard's input was not only fabrication but also reviewing all weights of systems, piping and outfitting based on its experience of building similar units. Often these aspects are underestimated by design and consultancy companies.
Part of the development was also the verification of the motional behavior and the mooring system. Model tests were performed in the Danish Maritime Institute.

After concluding the hull basic design, including DNV and ABS approval and the major detailed design related to equipment and piping systems, the building costs of this DSS20-R design revealed a price advantage compared to the 3rd generation units such as Aker H3 and GVA 4000 designs.
Unfortunately, this joint DSS20-R development did not immediately progress to the construction stage as the offshore market went into a serious downturn around 1985. This lasted until mid '95, when the first signs of revival started. The interest in newbuilding started in Brazil, as Petrobras intended to increase drilling activities with new builds owned and operated by Brazilian drilling contractors.
On the basis of this interest, the joint development of the DSS20 was revived. Some changes were required: this time the unit should operate in a DP mode (DPS 2+) and suitable for 5,000 ft of waterdepth. Still this project stopped due to financing problems..

But never mind – a next opportunity suited to the DSS20 did arrive. This time in the Caspian Sea. Azerbaijan started to develop the offshore activities and major oil companies like BP, Chevron and Exxon were looking into new drilling units to operate in the Caspian Sea.
One of the drilling contractors showing interest was Maersk Drilling. The combination of Maersk, Keppel and MSC was the strongest and a new project for the DSS20 was born, called the DSS20-CAS-M whereby the M stands for moored version. The unit could be moored self-contained in 500 m water, and with prelaid mooring up to 1,000 m. Traction winches were selected with the storage reels down in the floaters.
Again a full new basic design to the requirements of Maersk Contractors and the oil companies was carried out by a joint KeppelFELS and MSC team. By 2000, all documents were finalized, and the contract negotiations between Maersk and oil companies and Maersk and KeppelFELS were concluded. The first DSS20 construction finally took off.

Offshore footprint

With Maersk Explorer as its first new build semi-submersible in its fleet, Maersk Drilling was planning on new developments. Its interest was in deep water and moderate environment. In the contacts with Maersk Drilling, proposals for larger units were discussed and this resulted in a DSS50 unit with a displacement of 55,000 t, 8,500 t variable deck load, a maximum payload of 13,500 t, water depth up to 10,000 ft with 10,000 ft vertical riser storage. A dual derrick system was added and large liquid mud storage of 2,900 m3 required. After some rounds with international shipyards, Maersk Drilling decided to stick to its well-known triangle with KeppelFELS and MSC.
A new star was born, and as it was seen as the successor to the successful DSS20 project, the project name for these units was DSS21. Maersk Drilling finally ordered three DSS21 units with the Maersk Developer delivered in 2008, the Maersk Discoverer in 2010 and the Maersk Deliverer in 2011. Global Santa-Fé approached KeppelFELS in 2004 to discuss the Development Driller III. This resulted in the building contract for the DSS51 (based on the same hull design as the DSS21) with delivery in 2009.

The joint development of DSS between KeppelFELS and MSC which had started in 1984 finally paid off after many years with the construction of the Maersk Explorer and a total of 16 DSS units built under license at KeppelFELS.

MAIN CHARACTERISTICS

Length main deck	63.5 m
Breadth main deck	64.5 m
Depth	35.0 m
Displacement	30,500 mt

THE MAERSK EXPLORER WAS THE FIRST OF THE SUCCESSFUL DSS SERIES OF SEMI-SUBMERSIBLE DESIGNS.

MILESTONE 11

KRAKEN AND LEVIATHAN

It was in the mid-eighties that MSC decided to develop a new generation of service jack-ups, the NG series (with NG standing for New Generation). These jack-ups have a somewhat more ship-shaped hull, are self-propelled and are equipped with the MSC pin-in-hole jacking system operating on a circular tubular leg. The first unit in the series was the NG-2000 (2000 for the max preload force per leg).

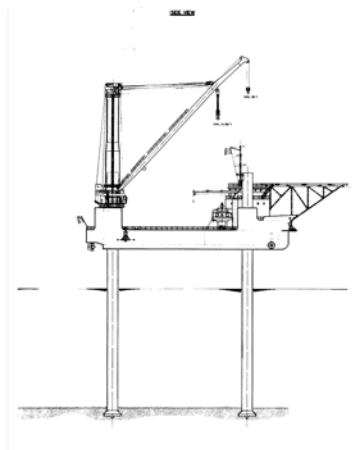

Original NG-2000 (1985)

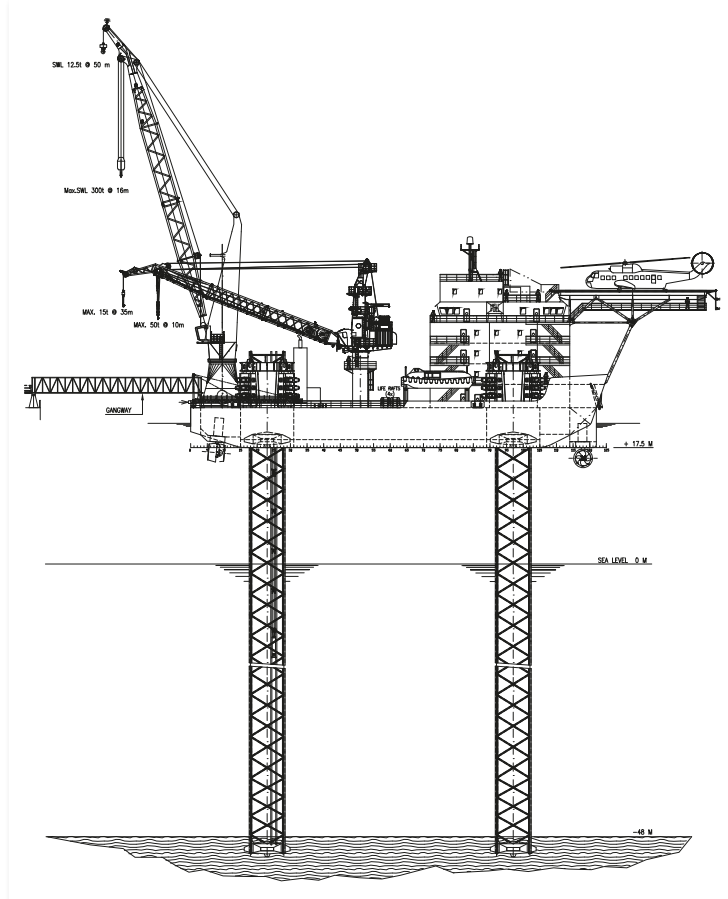

NG-2500X generic design (2015)

The idea behind this NG series was a jack-up that could be used for maintenance, expansion, conversion and/or accommodation of fixed offshore Oil & Gas production platforms and was able to move and install independently of tugs, rather like the US liftboats in the Gulf of Mexico but now suitable for operations in the harsher environment of the North Sea.

In the following years the design attracted quite a lot of attention but prospective owners found it difficult to convince the North Sea oil companies to commit to a higher day rate compared to a non-propelled unit.

Some 10 years later MSC developed a self-propelled cantilever (light) drilling jack-up (NG-1650), equipped with small width truss-type legs and a Rack & Pinion (R&P) Jacking System for Schlumberger (named Bima). This unit was built and delivered by PPL (Singapore) in 1998.

Unit description

Soon thereafter, on the basis of interest from Workfox, MSC developed the NG-2500X: a self-propelled jack-up with truss type legs, R&P Jacking Systems and a 300 ton crane.
During this project Shell-Expro came with a tender for a self-propelled jack-up to function as a hub for accommodation and maintenance in their southern North Sea fields; their intention was to reduce the number of helicopter flights from shore. Workfox proposed a NG jack-up for this tender and was very near to signing a contract when Shell-Expro withdrew the tender at the very last moment in 2003.

Several years later the newly formed UK company SeaJacks decided to build two of the NG-2500X units on speculation. SeaJacks signed a construction contract with Lamprell in Dubai, and Lamprell contracted MSC for the Basic Design License and the supply of a Gusto R&P Jacking System. Both units (Kraken and Leviathan) were delivered in 2009 and have been operating successfully for projects in both the Oil & Gas and the Offshore Wind turbine installations & maintenance market.

Offshore footprint

Since then the success of Kraken and Leviathan has led to another 17 orders as of 2015 for the NG-2500X designs from 6 different owners and operators worldwide.

MAIN CHARACTERISTICS

Length	61.0 m
Breadth	36.0 m
Depth	6.0 m
Leg length	84.4 m

The first GustoMSC VFD R&P jacking system installed on Kraken

SINCE THE SUCCESS OF SEAJACKS KRAKEN AND LEVIATHAN, MANY MORE ORDERS FOR THE NG-2500X DESIGN FROM DIFFERENT OWNERS AND OPERATORS WORLDWIDE FOLLOWED.

MILESTONE 12

DEEPWATER CHAMPION

GustoMSC pioneered its way into the drillship industry with the Pelican. In the mid 2000s, a new generation was developed to go beyond the 10,000' water depth mark: the P10,000 NG class.

Until the 6th generation drillships, the vessels were designed in cooperation with the drilling contractor, whereafter the design package was taken over by the yard for detailing and building. Most specialized and drilling equipment was then being furnished by the owner. This shifted to a model where the shipyard offered a drillship turn-key including all drilling equipment. So instead of the contractor being the main client, the yard became the main client.

Unit description

Mid 2000, GustoMSC entered into a drillship license agreement with Hyundai Heavy Industries (HHI), the largest shipbuilder in the world based in Ulsan, South Korea. The P10,000 design was refreshed and made fit for modern 6th generation market and industry needs. This resulted in an integrated design where the original crude oil storage spaces were used for equipment integration, making the ship more efficient than any of its competitors. This P10,000 NG was able to offer the same drilling performance with 25-30% less displacement. Mid 2007 the strength of the proposition was recognized and in September 2007 the contract was signed in Houston between Hyundai and drilling contractor GlobalSantaFe for the turnkey supply of a GustoMSC P10,000 drillship. The ship was offered with a fabrication period of almost 3 years and although HHI had never built a drillship before, they accomplished the construction, commissioning of vessel and drilling systems, system integration, testing program, sea trials and delivery of the Deepwater Champion to Transocean (during the project, GlobalSantaFe was acquired by Transocean) in 2010. Precisely on schedule, without any major HSE incidents.

Offshore footprint

The order for the Deepwater Champion was soon followed by a two-off order from Deepsea Metro, resulting in the delivery of Deepsea Metro I and II in 2011. After that several major contractors placed their orders for multiple ships, resulting in a total of 16 ships. Fred Olsen ordered Bolette Dolphin, Noble Drilling ordered four ships: Noble Tom Madden, Noble Sam Croft, Noble Bob Douglas and the Noble Don Taylor. Diamond Offshore and Rowan Companies also ordered four each: Ocean BlackHawk, Ocean BlackHornet, Ocean BlackRhino, Ocean BlackLion for Diamond and the Rowan Renaissance, Rowan Resolute, Rowan Reliance and Rowan Relentless for Rowan.

MAIN CHARACTERISTICS

Length	229.6 m
Breadth	36.0 m
Depth	18.3 m
Displacement	76,000 t

MILESTONE 13

FLOATEL SUPERIOR

Semi-submersible vessels can serve different market segments in the oil and gas industry. Well-known market segments to date are drilling services, accommodation services and installation and construction services. In the early 80s, KeppelFELS and MSC developed the DSS20 design as a compact drilling semi-submersible. The first unit built in the DSS series was the Maersk Explorer, a DSS20-CAS-M, in 2003.

Floatel Superior

In 2007, KeppelFELS and GustoMSC reviewed the possibility to also use the DSS20 hull form for the accommodation services. The client, Floatel International, would like to operate with new build units in the North Sea, Norwegian Continental Shelf. This created a challenge for the design team; the DSS20 was initially designed for a moderate environment, thus airgaps in operating and survival conditions as well as the structural design of the unit needed to be reviewed. For KeppelFELS the main driver for using the DSS20 hull was the proven design, and the detailed design and construction method were already available. The main changes for this accommodation version were:

- No drilling but a full fetch 440 POB, single person cabins according to Norwegian standards.
- Positioning to be DP3 as well as moored with thruster assistance.
- Motional behavior for northern North Sea conditions, airgap analysis.
- Structural design, and specifically the fatigue analysis for North Sea conditions.

Unit description

The design team took up this challenge and arrived in the basic design stage at the DSS20NS-DP3, with the following modifications to the hull form:

- Change of operating draft from 20.5 to 18 m to increase operating airgap to 9.5 m.
- Change of survival draft from 16 to 14.5 m, with a survival airgap of 13 m.
- An 8 point mooring system with 3” wires.
- A six thruster arrangement with 3.2 MW azimuthing thrusters.

One of the challenges during the design process was the mooring analysis. In DP3 mode only, the vessel could well be disconnected from the fixed platform by retracting the telescopic gangway, sail away and survive the storm. In the moored condition, the vessel will be disconnected and winched to a standby position. In the standby condition, the mooring system is still operational and the 6 thrusters will be used to support the mooring system. The combined mooring thruster system meets DNV requirements, for both the operational condition next to another platform as well as in standby condition.

THE DSS20 WAS INITIALLY DESIGNED FOR A MODERATE ENVIRONMENT, THUS AIRGAPS IN OPERATING AND SURVIVAL CONDITIONS AS WELL AS THE STRUCTURAL DESIGN OF THE UNIT NEEDED TO BE REVIEWED.

Offshore footprint

The Floatel Superior was delivered to Floatel in March 2010. The vessel started operations in the North Sea, first on the Talisman YME field, and after that on a long-term contract with Statoil from August 2010. Floatel had such confidence in the Norwegian accommodation market that two years later they ordered a second unit, the Floatel Endurance, which was delivered to Floatel in early 2015.

MAIN CHARACTERISTICS

Length	70.5 m
Breadth	64.5 m
Depth	35.0 m
Displacement	29,000 t

THE FLOATEL SUPERIOR, A DSS DESIGN PROVIDING ACCOMODATION FOR 440 PERSONS.

MILESTONE 14

SEA INSTALLER

The Sea Installer is the first self-propelled wind turbine installation jack-up delivered to the GustoMSC NG-9000C design. The NG-9000C was also the first project executed as a joint project between, and for the joint account of, the two companies Gusto and MSC, which at that time were still operating separately.

Sea Challenger (left) and Sea Installer (right)

This joint project brought together two streams of experience in designing self-propelled jack-ups for the installation of wind turbines offshore.

Gusto had extensive experience with its designs for units for MPI: the Resolution, the Adventure and the Discovery and also the Wind Lift I for Bard; all equipped with Gusto hydraulic jacking systems. MSC had experience through their designs for: the Wind for DeBrandt, the Kraken and Leviathan for SeaJacks and the Endeavour and Endurance for GMS, the last four all equipped with the Gusto electric driven Rack & Pinion Jacking System.

At that time, Gusto had a design project going for a large self-propelled jack-up vessel which had seen interest from A2SEA and Fred. Olsen. A Gusto designed 800 ton crane situated around one of the legs was also part of this project. MSC was working on an NG-5500C on the basis of an interest from SeaJacks, using their newly developed hydraulic jacking system for tubular legs with continuous movement.

With the offshore windfarm industry booming and an increasing number of newcomers designing jack-ups and jacking systems, it was clear that in order to keep our market share we needed to cooperate more efficiently.

Unit description

In 2009 the decision was therefore made to form a joint team for the development of the basic design of the NG-9000C self-propelled jack-up, aiming at various clients and using the Gusto vessel design, the MSC tubular leg design with the MSC continuous jacking system and the Gusto 800 ton crane around the leg.

The first order for the NG-9000C came shortly after that, the Drydocks World South East Asia (DDW-SE) Shipyard decided to build an NG-9000C on speculation and ordered the license for the design, the jacking system and the crane. Several months later, Fred. Olsen concluded a contract with Lamprell for the construction of two NG-9000C Units. Several months later again, A2SEA also concluded an order for the NG-9000C Sea Installer with COSCO shipyard in Qidong China.

During the execution of the projects for these units, DDW-SE decided to suspend and later to stop their project for the construction of the NG-9000C. Gusto and MSC decided to continue their subcontracts for the fabrication of the jacking system and crane, and the equipment was eventually diverted to one of the other NG-9000C projects.
First to be delivered was the Sea Installer, by COSCO in August 2012, followed by Brave Tern and Bold Tern delivered by Lamprell in October 2012 and February 2013 respectively.

COSCO received an order from A2SEA for a second NG-9000C early in 2012, this unit named Sea Challenger was delivered in 2014.

Offshore footprint

All in all, this joint effort between Gusto and MSC resulted in 4 NG-9000C units and 1 NG-5500C unit (Zaratan for SeaJacks delivered by Lamprell early in 2012) all equipped with GustoMSC Wrap-around Cranes and GustoMSC Continuous Hydraulic Jacking Systems, a major success for a joint effort and a strong incentive for the final merger between Gusto and MSC at the end of 2012.

MAIN CHARACTERISTICS

Length	132.4 m
Breadth	39.0 m
Depth	9.0 m
Leg length	82.5 m

SEA INSTALLER A MAJOR SUCCESS FOR A JOINT EFFORT AND A STRONG INCENTIVE FOR THE FINAL MERGER BETWEEN GUSTO AND MSC AT THE END OF 2012.

MILESTONE 15

CAT-J

The Norwegian Continental Shelf (NCS) has always been a very challenging environment for offshore oil production, but one with great benefits due to the massive amount of oil lying deep below the North Sea seabed. The technology and experience required to unlock this potential pose a major barrier to entry by newcomers and has historically resulted in only a limited number of offshore drilling contractors being able to operate on the NCS.

Due to the close geographical proximity, GustoMSC has always had a strong focus on the North Sea, where the first CJ46 jack-ups designed around 1980 are still operating even today in the southern part of the North Sea after 35 years. The largest jack-ups of the world specifically designed for the NCS currently in operation are the GustoMSC CJ70s, the first in line ordered by Maersk Contractors (now Maersk Drilling) as the launching owner in 2000.

In 2010, when Statoil fixed its sights on maintaining the production level on the Norwegian Continental Shelf through to 2020, it realized that it needed – first and foremost – to improve recovery from the existing oilfields, while – secondly – developing new fields quickly and efficiently. After an evaluation of the prospects and the existing drilling fleet, it became evident that new ultra-harsh environment drilling jack-ups had to come to the market. At that time Statoil had already initiated its CAT initiative, which was aimed at moving away from fixed platform drilling solutions towards mobile drilling rigs dedicated to specific field developments.

This had resulted in four new floating solutions (the CAT-D Semi-submersibles) and plans for a new drilling jack-up solution (CAT-J). Due to the excellent proven track record of the CJ70s in operation at that time, and GustoMSC's experience in providing jack-up designs for the North Sea, Statoil went against their normal business practice and opted for a single source jack-up design, the CJ70, for their new CAT-J project. Together with the industry (drilling equipment vendors, construction yards, the drilling contractors and GustoMSC) Statoil initiated an 18 month FEED program to customize the CJ70 design with a strong focus on HSE and the ability to work on subsea wells.

Unit description

This FEED was set up in such a way that the three main drilling equipment vendors (AkerMH, NOV, Cameron/TTS) were to develop their own proposals for the internal cantilever lay-out independently, where our role mainly consisted of maintaining the overall structural integrity of the cantilever and looking after the cantilever combined load chart. Statoil took the lead in the HSE aspects of the rig, focusing on compliance with the Norwegian rules and regulations. Our lead activity in the project consisted of ensuring that the overall basic design of the CJ70 would not be compromised. However, due to the additional functionalities put into the rig during this FEED phase of the project, as well as a significant global environmental load increase coming from new structural integrity requirements by Statoil (for example very high ALS loads and new methods of defining dynamic amplification), the jack-up also needed to be upgraded structurally, meaning stronger legs and fixation systems and thus the whole leg-to-hull interface had to be re-engineered. In addition to these structural requirements Statoil decided that one of the CAT-J prospects was to work on the Mariner field in the UK sector in a water depth of 110 meters and at a previously unheard airgap of around 70 meter. This extreme airgap resulted in extra challenges with regards to lifeboat lowering, crane usage, the loading stations and necessitated a lengthening of the legs to a new record of 214 meter.

The CAT-J was also equipped with the 4-layer GustoMSC VSD Jacking System, which brought with it a set of safety and redundancy features that were greatly appreciated by Statoil. As with all the drilling jack-ups in the CJ series these CJ70s also come equipped with the leg fixation system and the patented cantilever X-Y Skidding System. All this effort ultimately resulted – during the summer of 2012 – in the ordering of two CJ70 rigs from Samsung Heavy Industries in Korea and one CJ70 at Jurong Shipyard in Singapore. These three rigs will enter into service around 2016-2017.

Offshore footprint

These three CAT-J CJ70s bring the total of CJ70s in operation and under construction to 11, 6 of which are owned by Maersk Drilling and 2 by Seadrill.

MAIN CHARACTERISTICS

Length	90.5 m
Breath	105.0 m
Depth	12.0 m
Leg Length	199.0 m

CHAPTER 4

THE NEW GUSTOMSC OFFICE

A BASIS FOR THE FUTURE

In 2016 GustoMSC head office has moved to a unique new location. The Timmerfabriek in Schiedam has been transformed from the carpentry workshop of the former Wilton Fijenoord shipyard into the new headquarters of GustoMSC. The open and transparent setup of this contemporary workplace facilitates cooperation and encourages fresh thinking and innovation.

This striking industrial building, located in the Vijfsluizen business center in Schiedam West, dates back to 1948, immediately after World War II. The three-story concrete building radiates hope for a bright future, optimism, work spirit and unity. The main characteristics are large windows which let in plenty of natural sunlight, a floor-to-floor height of four to six meters, a central atrium with glass roof bricks and four concrete barrel roofs. With its uniqueness and inherent quality it fits the character of GustoMSC like a glove. The mobile offshore units mentioned and described in previous chapters are key to the development and success of GustoMSC today and in recognition of that fact their names have been used for the conference rooms at the new headquarters.

CHAPTER 5

GUSTOMSC AND ITS FUTURE

The milestone units featured the innovative solutions of GustoMSC that are key to many sectors of the offshore industry. During the last 150 years our company has evolved from an engineering workshop to a world-renowned design and engineering company in the maritime industry.

By serving the offshore industry, GustoMSC contributes to the global energy supply. Constant cooperation with clients will provide innovations and new technologies that are economically and socially acceptable to all those involved.

Years of design, construction and supply of equipment and offshore units are ingrained in its culture. Thanks to the distinctive problem solving skills of its passionate engineers, GustoMSC's position of global market leader in the design and engineering of jack-ups, semis and vessels will be maintained.

GustoMSC therefore considers employees to be the most valuable asset. Currently, its staff of 200 offers some 2000 man-years of experience. The goal is to keep the quality of the teams, the collegiality and professionalism, at a high level to maintain product leadership. Driven by the elegance of optimal technical solutions, this results in projects that are completed to the satisfaction of clients, and subsequently bring about technological developments and innovation.

Looking ahead is vital. There will be a growing demand for renewable energy and technological possibilities will certainly change our perspective in time. Whatever the future will bring, GustoMSC shall always support clients with solid ideas and innovative solutions in order for them to excel in the present and future markets.

A publication of GustoMSC
Total circulation: 1,000
First edition 2016

Editing, design and production
Total Identity, Amsterdam

Editors
Jan Suyderhoud
Tessa Vleugels

Design and illustrations
Sümeyra Günaydin
Julius van der Woude

GustoMSC
Karel Doormanweg 35
3115 JD Schiedam
The Netherlands
+31 (0)10 2883 000
info@gustomsc.com

www.gustomsc.com

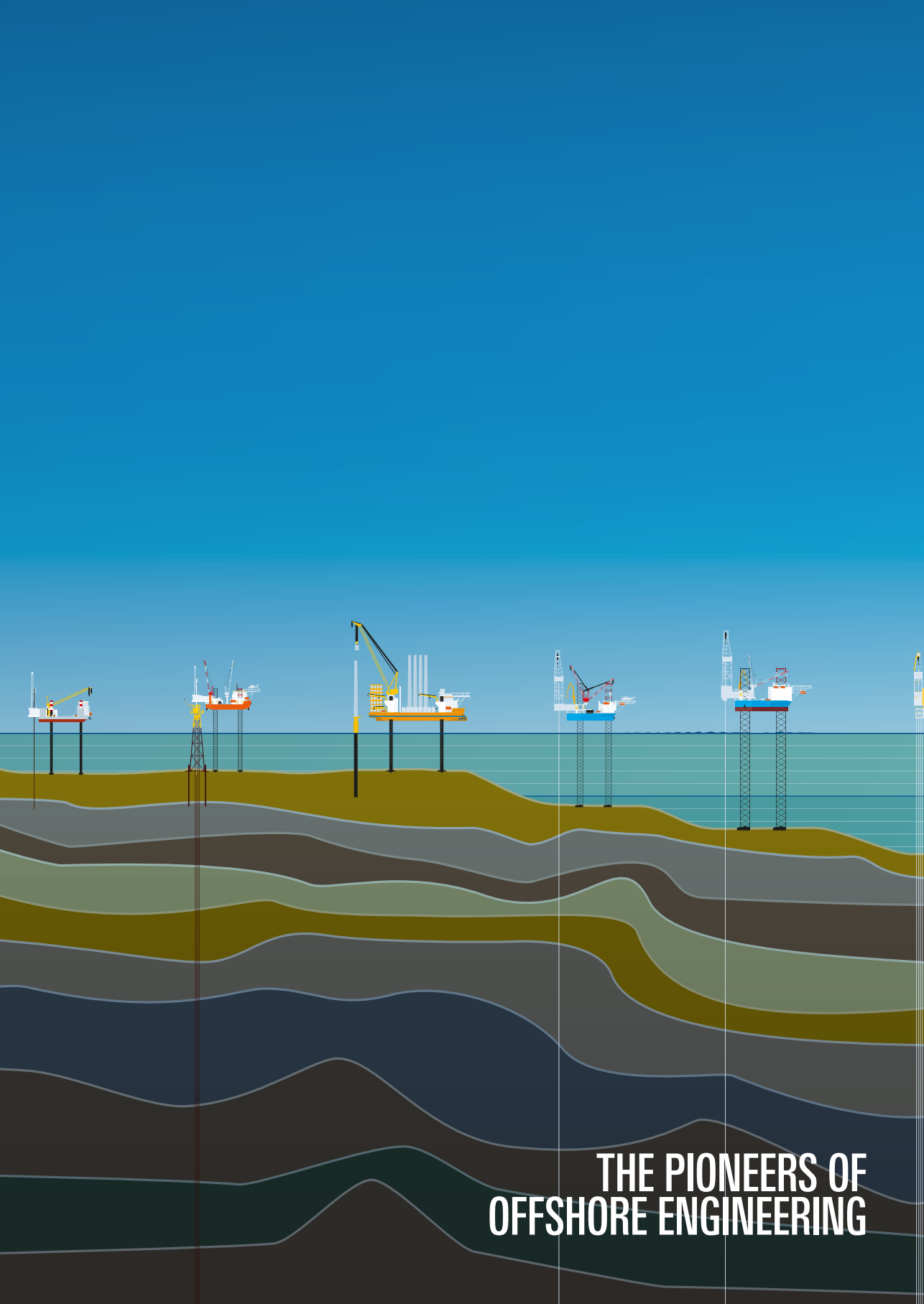

THE PIONEERS OF OFFSHORE ENGINEERING